SG01S (new part number = SG01S-18)
Broad Band SiC based UV photodiode *A* = 0,060mm^2

General Features

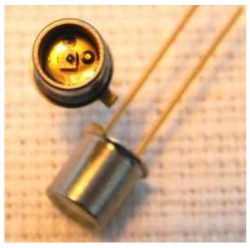

Properties of the SG01S UV photodiode

- Broad Band UVA+UVB+UVC, PTB tested high chip stability
- Active Area *A* = 0,060 mm^2
- TO18 hermetically sealed metal housing
- 10mW/cm^2 peak radiation results a current of approx. 780nA

About the material Silicon Carbide (SiC)

SiC provides the unique property of near-perfect visible blindness, low dark current, high speed and low noise. These features make SiC the best available material for visible blind semiconductor UV detectors. Some SiC detectors (our HT-series) can be permanently operated at up to 170℃. The temperature coefficie nt of signal (responsivity) is also low, <0,1%/K. Because of the low noise (dark current, in the fA range), very low UV radiation intensities can be measured reliably. Please note that this device needs an appropriate amplifier (see circuit on following page). SiC photodiodes are available as unfiltered broad band devices or with optical filters providing UV-A, UV-B, or UV-C-only sensitivity, or erythemal action curve compliance.

Specifications

Parameter	Symbol	Value	Unit
Maximum Ratings			
Operating Temperature Range	T_{opt}	*-55 … +120*	℃
Storage Temperature Range	T_{stor}	*-55 … +120*	℃
Soldering Temperature (3s)	T_{sold}	*260*	℃
Reverse voltage	V_{Rmax}	*20*	*V*
General Characteristics (*T*=25℃)			
Active Area	*A*	*0,06*	*mm^2*
Dark current (1V reverse bias)	I_d	*0,2*	*fA*
Capacitance	*C*	*15*	*pF*
Short circuit (10mW/cm^2 at peak)	I_0	*780*	*nA*
Temperature coefficient	*Tc*	*<-0,1*	*%/K*
Spectral Characteristics (*T*=25℃)			
Max. spectral sensitivity	S_{max}	*0,130*	*AW^{-1}*
Wavelength of max. spectral sens.	λ_{max}	*300*	*nm*
Sensitivity range (S=0,1*S_{max})	-	*215 … 365*	*nm*
Visible blindness (S_{max} / $S_{>405nm}$)	*VB*	*>10^{10}*	-

Manufacturer: **sg***lux* GmbH, Max-Planck-Str. 3, D-12489 Berlin, Tel. +49 30 5301 5211, Fax +49 30 5301 5209
mail: welcome@sglux.de - web: www.sglux.de - WEEE No. DE 76297302

Spectral Response

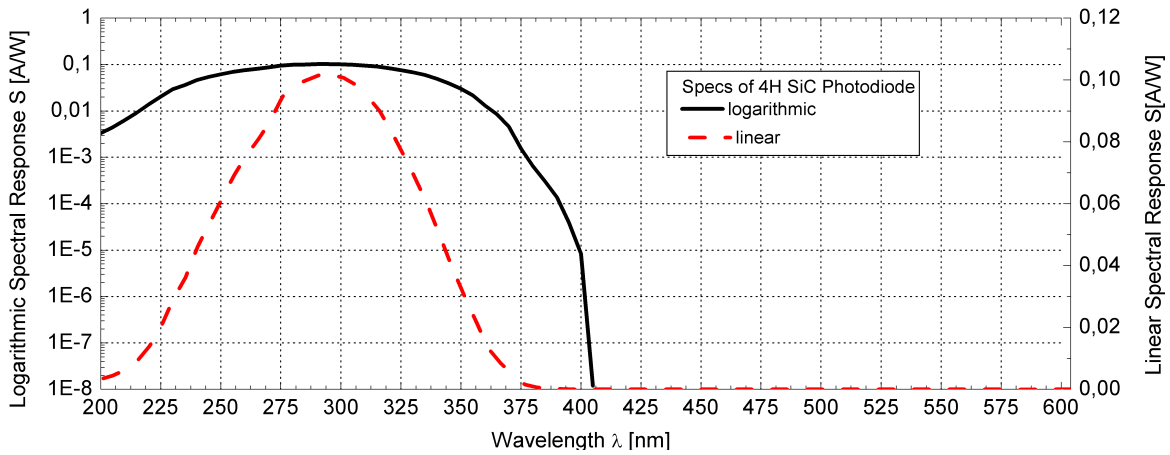

Circuit

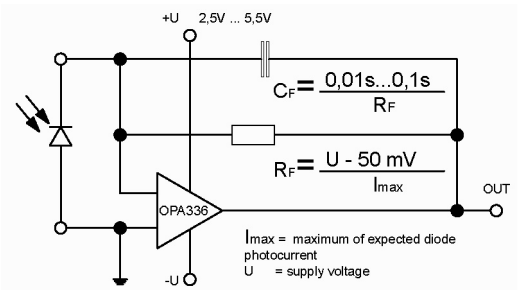

Viewing Angle

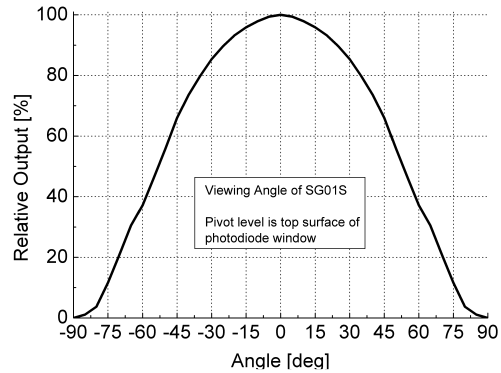

Drawing

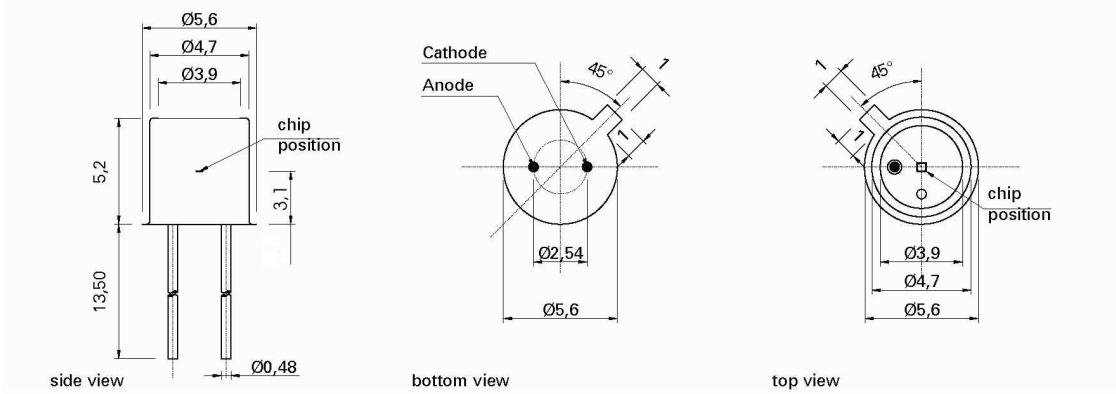

Manufacturer: **sg***lux* GmbH, Max-Planck-Str. 3, D-12489 Berlin, Tel. +49 30 5301 5211, Fax +49 30 5301 5209
mail: welcome@sglux.de - web: www.sglux.de - WEEE No. DE 76297302

Application Note

For correct reading of the photodiode the current (and NOT the voltage) must be analyzed. This requires a short circuiting of the photodiode. Usual approaches are using a **Picoamperemeter** such as Keithley 617 or a **transimpedance amplifier** circuit as shown on page 2 of this datasheet. Please contact us in case of questions.

The below listed modules help you to get the best measurement information from your photodiode.

Internal & external Photodiode Amplifiers (EUR 99,- to EUR 149,-)

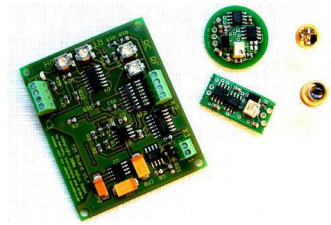

- stable and reliable photodiode amplification
- TOCON-Series = photodiodes with integrated amplifier
- BOARD-Series = external photodiode amplifiers
- further information: www.sglux.com/tocon or www.sglux.com/boards

UV probes with built in amplifier (EUR 195,- to EUR 329,-)

- different housings e.g. with cosine response, water pressure proof or Sapphire windows
- different electronic outputs available (voltage, current, USB)
- further information: www.sglux.com/probes

UV Intensity / Dose Monitor / Controller "SENSOR MONITOR" (EUR 390,- to EUR 950,-)

- two channel photodiode or sensor input
- three user programmable relay outputs
- programmable display, USB/TTY/RS232 data transmission
- further information: www.sglux.com/monitor

UV Radiation Controller "RADIKON" (EUR 290,-)

- Industrial DIN rail radiation controller module
- works with mV and nA….mA sensor output signals
- further information: www.sglux.com/radikon

Manufacturer: **sg***lux* GmbH, Max-Planck-Str. 3, D-12489 Berlin, Tel. +49 30 5301 5211, Fax +49 30 5301 5209
mail: welcome@sglux.de - web: www.sglux.de - WEEE No. DE 76297302